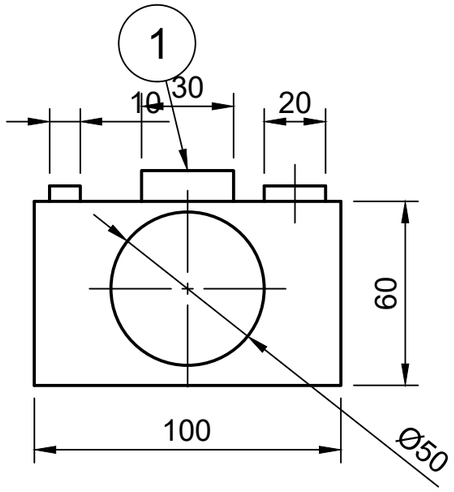

FRONT VIEW

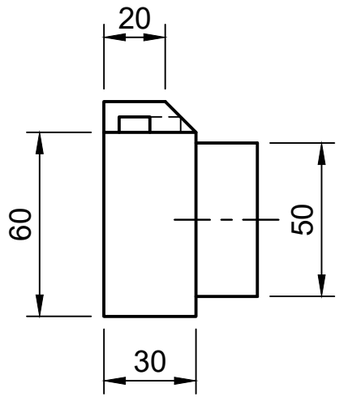

SIDE VIEW

Parts List			
Item	Qty	Part Number	Material
1	1	2026-02-11-13-57-45-267	Steel

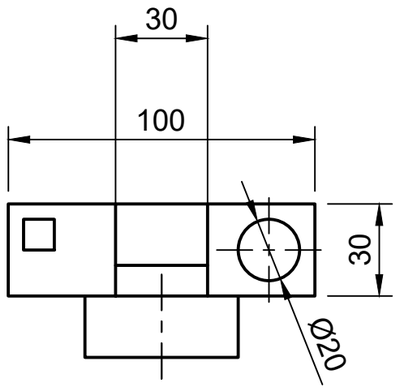

TOP VIEW

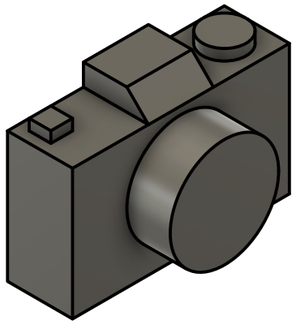
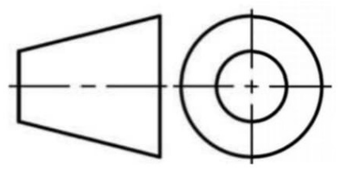
Dept. CSE	Technical reference 212225040228	Created by MANOSHREE N 25-02-2026	Approved by DR SARAVANAN MS
		Document type SKETCH	Document status
		Title camera 1	DWG No.
			Rev. / Date of issue 25/02/2026 / Sheet 1/1